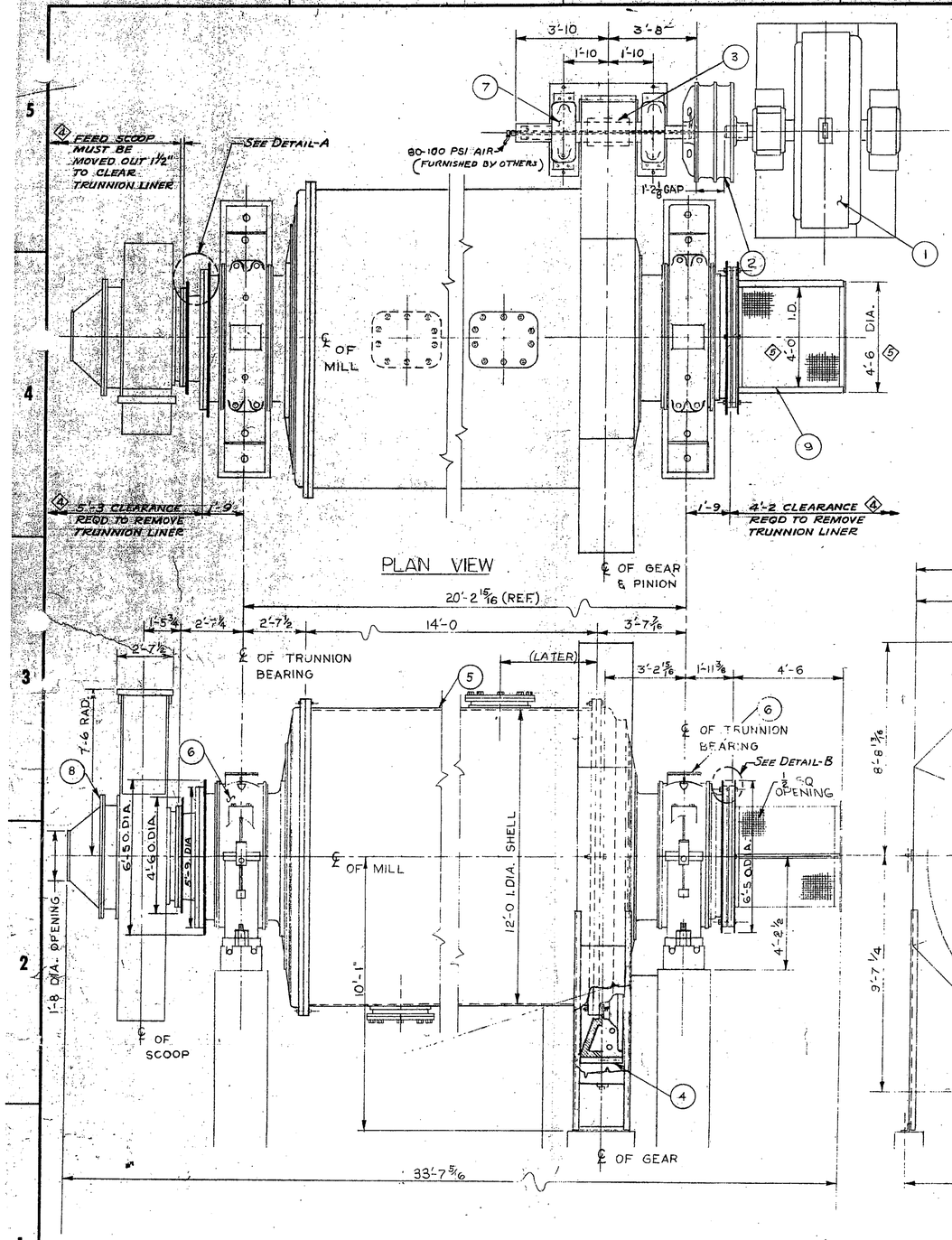

PLAN VIEW

ELEVATION

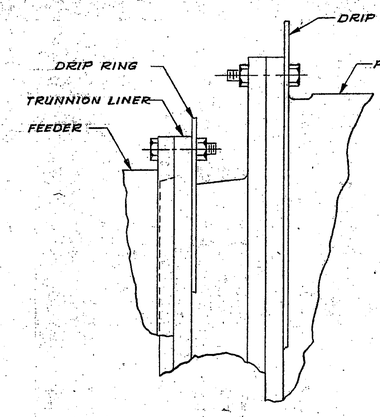

DETAIL-A
SCALE 1/8

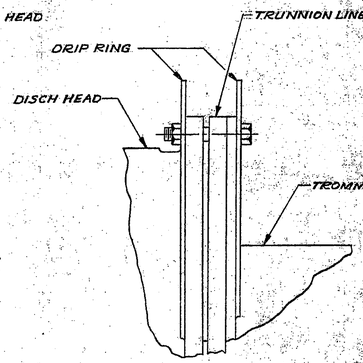

DETAIL-B
SCALE 1/8

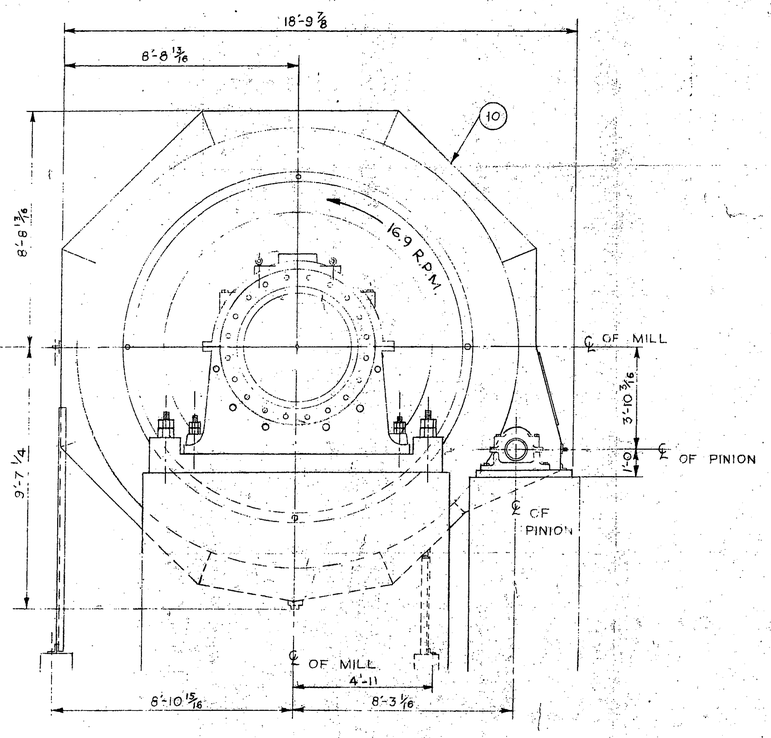

DISCHARGE END ELEVATION
SHOWN

THIS DRAWING MADE FROM DWG. No. 102404

REVISIONS

SYM	ZONE	DESCRIPTION	DATE	APPROVED
1	B-2	402268, 103299-90, 103285-90, A-102543	6-4-70	
		WAS 402143, A-102409, A-102433, A-102534 RESP. GB		RLB
2	B-3	103357-90 WAS A-102434	9-25-70	
3	B-2	P/N 800906-90 WAS 1-800638 CARB	11/17/70	
4	E-4	ADDED DETAILS A & B & CLEARANCE DIM	7-10-72	
5	E-4	WAS 4'-6 1/4 & 4'-0 1/4 AB	8-9-72	

GENERAL NOTES:

1. ESTIMATED WEIGHT OF COMPLETE MILL, WITHOUT CLUTCH, MOTOR BALL OR PULP CHARGES: 290,800 LBS.
2. TORQUE GEAR AND HEAD FLANGE BOLTS. REFER TO SHELL ASSEMBLY DW'G No. 103264 FOR SPECIFIC INFORMATION.
3. AMOUNT OF GRINDING CHARGE (191,500 LBS) REQUIRED IS EQUAL TO 45 PERCENT OF GRINDING CHAMBER.
4. FOR REDUCTION OF THIS DWG. SEE (LATER)

msi industries, inc.

12'-0 X 14'-0 MARCY GRATE MILL
REGISTER No. 21402
PHELPS - DODGE CORP.
ORDER No. D286 B38100
TAG ACCT. 15040201

CERTIFIED DRAWING
SER. NO. 2860-72
DATE AUG. 24 '72
By msi industries, inc.

REQ'D. THIS ORDER	ITEM NO.	PART NUMBER	REQ'D. ONE ASS'Y	MATERIAL	DESCRIPTION
+	11	BY OTHERS	3	+	GRADED BALL CHARGE
+	10	103357-90	1	+	GEAR GUARD ASSEMBLY
+	9	A-202651	1	+	TROMMEL SCREEN ASSEMBLY
+	8	A-102543	1	+	FEED SCOOP ASSEMBLY R.H.
+	7	103285-90	1	+	PINION BEARING ASSEMBLY
+	6	103299-90	2	+	TRUNNION BEARING ASSEMBLY
+	5	103264-90	1	+	SHELL ASSEMBLY
+	4	1-402162	1	+	GEAR, SINGLE HELICAL, R.H.
					HELIX, 256 TEETH, 1.25 D.P.,
					21 FACE, SPEED: 16.9 R.P.M.
+	3	1-402268	1	+	PINION, SINGLE HELICAL, L.H.
					HELIX, 18 TEETH, 1.25 D.P., 21 FACE
					SPEED: 240 R.P.M.
+	2	800906-90	1	+	AIR CLUTCH, "FAVICK" 38 VC 1200
+	1	BY OTHERS	1	+	MOTOR, SYNCHRONOUS, 1500 HP
					240 RPM, 60 CYCLE
+		103263-90	+	+	12'-0 I.DIA. X 14'-0 LG. MARCY
					BALL MILL, GRATE TYPE, R.H.

MATERIAL LIST

UNLESS OTHERWISE SPECIFIED ALL DIMENSIONS ARE IN INCHES. TOLERANCES ON
FRACTIONS ±
ONE PLACE DECIMALS ±
TWO PLACE DECIMALS ±
THREE PLACE DECIMALS ±
ANGLES ±

DRAWN BY Ostrander 3/31/70
CHECKED BY R.L. Lambert 4-7-70

THIS DRAWING IS THE PROPERTY OF MINE & SMELTER SUPPLY CO. AND MUST BE RETURNED ON REQUEST. DATA ON THIS DRAWING MUST NOT BE USED WITHOUT OUR PERMISSION.
ALL RIGHTS ARE RESERVED, BOTH AS TO PATENTS AND DESIGN.

NEXT ASSEMBLY 103262

MFG. DIVISION | MINE & SMELTER SUPPLY CO.
ENG. DEPARTMENT | DENVER, COLO. U.S.A.

GENERAL ARRANGEMENT

DRAWING NO. 103263
SCALE 3/8" = 1'-0
REVISION NO. 5